AVERY DENNISON MARKETING SPECIFICATION

THE SUBJECT MATTER DISCLOSED HEREIN EMBODIES PROPRIETARY INFORMATION WHICH IS THE CONFIDENTIAL PROPERTY OF THE AVERY DENNISON CO. NONE OF WHICH SHALL BE COPIED, REPRODUCED, DISCLOSED TO OTHERS, PUBLISHED OR USED IN WHOLE OR IN PART, FOR ANY PURPOSE OTHER THAN THAT FOR WHICH IT IS BEING MADE AVAILABLE WITHOUT THE EXPRESS ADVANCE WRITTEN PERMISSION OF A DULY AUTHORIZED AGENT OF THE COMPANY. THIS DOCUMENT IS THE PROPERTY OF THE AVERY DENNISON CO. AND IS TO BE RETURNED TO THE COMPANY ON DEMAND.

HISTORY

REV.	DATE	DESCRIPTION
A	01.17.18	RELEASED

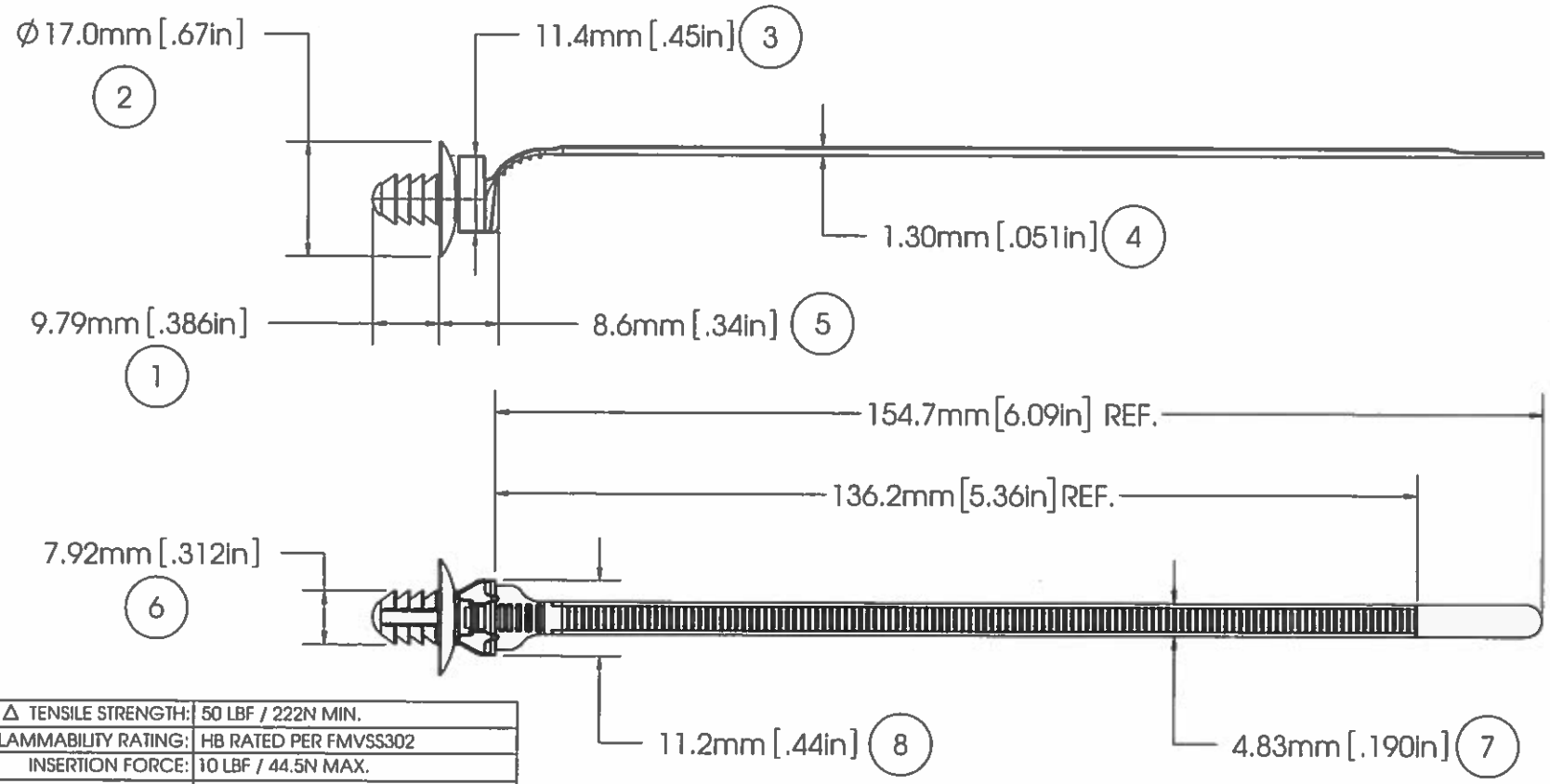

9	Δ TENSILE STRENGTH:	50 LBF / 222N MIN.
10	Δ FLAMMABILITY RATING:	HB RATED PER FMVSS302
	INSERTION FORCE:	10 LBF / 44.5N MAX.
	EXTRACTION FORCE:	35 LBF / 155.7N MIN.
	MOUNTING:	HOLE SIZE: Ø7.00mm to 6.35mm HOLE AND A 6.35 HEX HOLE IN; M8 THREADED HOLE. PANEL THICKNESS: 3.0mm MAX.
	OPERATING TEMP RANGE:	-40°F (-40°C) TO 302°F (150°C) CONTINUOUS AND 329°F (165°C) AT MAXIMUM EXPOSURE
	WEIGHT:	1.6g
	BUNDLE DIAMETER:	Ø1.6mm/.06in TO Ø38.1mm/1.50in
	TOOL:	12001 - HAND INSTALLATION TOOL 12500 - PNUEM. INSTALLATION TOOL
	TOOL TENSION SETTING:	6 - 8
	PACKAGING:	1000/BAG, 5 BAGS/MASTER

NOTES:
1. SPECIAL CHARACTERISTICS ARE NOTED BY A TRIANGLE (Δ)

APPROVALS:
ENG. APPR. 1/17/18
Q.A. APPR. Caitlin E Vaillancourt 1/17/18

SPECIFIED TOLERANCES ARE:
.XX ± .03 IN. .X ± .7mm
.XXX ± .010 IN. .XX ± .25mm
ANGULAR: ± 2°

MATERIAL
NYLON 6/6, IMPACT MODIFIED, HEAT STABILIZED

COLOR
BROWN

AVERY DENNISON
FASTENER DIVISION
FITCHBURG, MA 01420 U.S.A.
TEL. 1-800-225-5913
FAX. 978-353-8157

DESCRIPTION
4 FLUTE LIFT TIE, HI HEAT

STOCK NO. 20120-HHBN
REV. A

5 4 3 2 1